SPECIFICATION (TENTATIVE)

(200A/1200V-IGBT Module)

Device Name : IGBT Module
(RoHS compliant product)

Type Name : 2MBI200HJ-120-50

Spec. No. : MT5F27782

This material and the information herein is the property of Fuji Electric Co.,Ltd. They shall be neither reproduced , copied , lent , or disclosed in any way whatsoever for the use of any third party nor used for the manufacturing purposes without the express written consent of Fuji Electric Co.,Ltd.

	DATE	NAME	APPROVAL
DRAWN	Dec.-16-'13	S.Horie	S.Miyashita
CHECKED	Dec.-16-'13	S.Ogawa	

Fuji Electric Co., Ltd.

DWG.No. MT5F27782 1 / 8

Type Name: 2MBI200HJ-120-50 (RoHS compliant products)

1. Outline Drawing (Unit : mm)

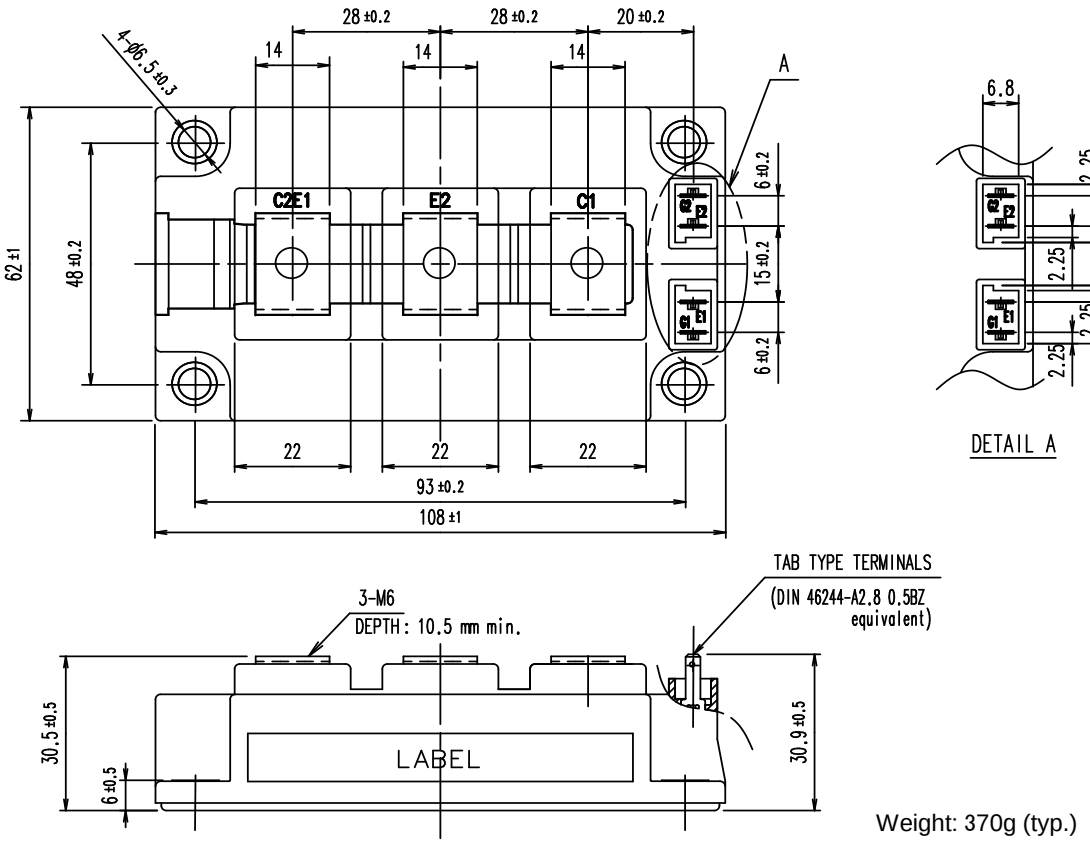

Weight: 370g (typ.)

2. Equivalent Circuit

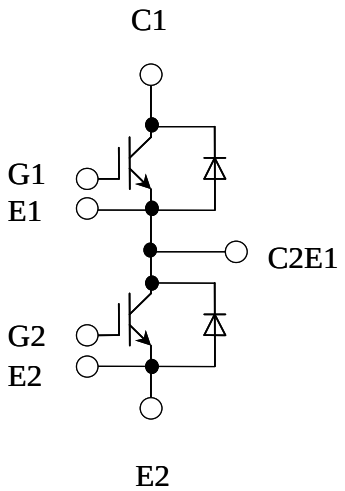

This material and the information herein is the property of Fuji Electric Co.,Ltd. They shall be neither reproduced , copied , lent , or disclosed in any way whatsoever for the use of any third party nor used for the manufacturing purposes without the express written consent of Fuji Electric Co.,Ltd.

3. Absolute Maximum Ratings (at Tc= 25°C unless otherwise specified)

Items		Symbols	Conditions		Maximum Ratings	Units
Collector-Emitter voltage		VCES			1200	V
Gate-Emitter voltage		VGES			±20	V
Collector current		Ic (b)	Continuous	Tc=80°C	200	
				Tc=25°C	275	
		Ic pulse	1ms		400	
		-Ic			300	
		-Ic pulse	1ms		600	
Collector power dissipation		Pc	1 device		1340	W
Junction temperature		Tj			150	°C
Case temperature		Tc			125	
Storage temperature		Tstg			-40 ~ 125	
Isolation voltage	between terminal and copper base (*1)	Viso	AC: 1min.		2500	VAC
Screw Torque	Mounting (*2)	-			6.0	N m
	Terminals (*3)	-			5.0	

(*1) All terminals should be connected together during the test.
(*2) Recommendable Value : 3.0-6.0 Nm (M5 or M6)
(*3) Recommendable Value : 2.5-5.0 Nm (M6)

This material and the information herein is the property of Fuji Electric Co., Ltd. They shall be neither reproduced , copied , lent, or disclosed in any way whatsoever for the use of any third party nor used for the manufacturing purposes without the express written consent of Fuji Electric Co.,Ltd.

This material and the information herein is the property of Fuji Electric Co.,Ltd. They shall be neither reproduced, copied, lent, or disclosed in any way whatsoever for the use of any third party nor used for the manufacturing purposes without the express written consent of Fuji Electric Co.,Ltd.

4. Electrical characteristics (at Tj= 25°C unless otherwise specified)

NOTICE:
The external gate resistance (Rg) shown below is one of our recommend value for the purpose of minimum switching loss. However the optimum Rg depends on circuit configuration and/or environment. We recommend that the Rg has to be carefully chosen based on consideration if IGBT module matches design criteria, for example, switching loss, EMC/EMI, spike voltage, surge current and no unexpected oscillation and so on.

Items	Symbols	Conditions		Characteristics min.	typ.	max.	Units
Zero gate voltage Collector current	ICES	VGE=0V, VCE=1200V		-	-	4.0	mA
Gate-Emitter leakage current	IGES	VCE=0V, VGE=±20V		-	-	800	nA
Gate-Emitter threshold voltage	VGE(th)	VCE=20V, Ic=200mA		5.7	6.2	6.7	V
Collector-Emitter saturation voltage	VCE(sat) (terminal)	VGE=15V, Ic=200A	Tj=25°C	-	3.40	3.70	V
			Tj=125°C	-	4.20	-	
	VCE(sat) (chip)	VGE=15V, Ic=200A	Tj=25°C	-	3.20	3.50	
			Tj=125°C	-	4.00	-	
Internal gate resistance	Rg(int)	-		-	0.8	-	Ω
Input capacitance	Cies	VCE=10V, VGE=0V, f=1MHz		-	17.2	-	nF
Turn-on time	ton	Vcc=600V, Ic=200A, VGE=±15V, Rg=4.7Ω, Tj=125°C, Ls=30nH		-	250	-	nsec
	tr			-	180	-	
	tr(i)			-	40	-	
Turn-off time	toff			-	300	-	
	tf			-	50	-	
Forward on voltage	VF (terminal)	VGE=0V, IF=300A	Tj=25°C	-	1.85	2.30	V
			Tj=125°C	-	2.00	-	
	VF (chip)	VGE=0V, IF=300A	Tj=25°C	-	1.70	2.15	
			Tj=125°C	-	1.85	-	
Reverse recovery time	trr	IF=200A		-	130	-	nsec

5. Thermal resistance characteristics

Items	Symbols	Conditions	Characteristics min.	typ.	max.	Units
Thermal resistance(1device)	Rth(j-c)	IGBT	-	-	0.093	°C/W
		FWD	-	-	0.15	
Contact thermal resistance (1device) (*1)	Rth(c-f)	with Thermal Compound	-	0.0125	-	

(*1) This is the value which is defined mounting on the additional cooling fin with thermal compound.

6. Recommend way of module mounting on Heat sink

(1) Initial : 1/3 specified torque, sequence (1)→(2)→(3)→(4)
(2) Final : Full specified torque (3.0 - 6.0 Nm),sequence(4)→(3)→(2)→(1)

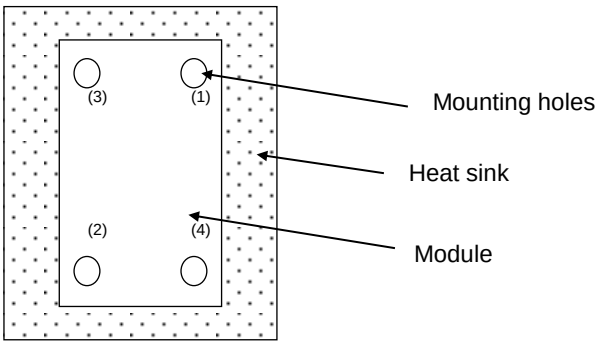

7. Indication on module

Display on the module label

- Logo of production
- Type name : 2MBI200HJ-120-50
- IC, VCES rating : 200A 1200V
- Lot No. (5 digits)
- Place of manufacturing (code)
- Bar code

8. Applicable Category

This specification is applied to IGBT Module named 2MBI200HJ-120-50.

9. Storage and transportation notes（保管・運搬上の注意事項）

- The module should be stored at a standard temperature of 5 to 35°C and humidity of 45 to 75% .
  常温・常湿保存が望ましい。(5～35°C, 45～75%)

- Store modules in a place with few temperature changes in order to avoid condensation on the module surface.
  急激な温度変化のなきこと。(モジュール表面が結露しないこと)

- Avoid exposure to corrosive gases and dust.
  腐食性ガスの発生場所、塵埃の多い場所は避けること。

- Avoid excessive external force on the module.
  製品に荷重がかからないように十分注意すること。

- Store modules with unprocessed terminals.
  モジュールの端子は未加工の状態で保管すること。

- Do not drop or otherwise shock the modules when transporting.
  製品の運搬時に衝撃を与えたり、落下させたりしないこと。

10. Definitions of switching time

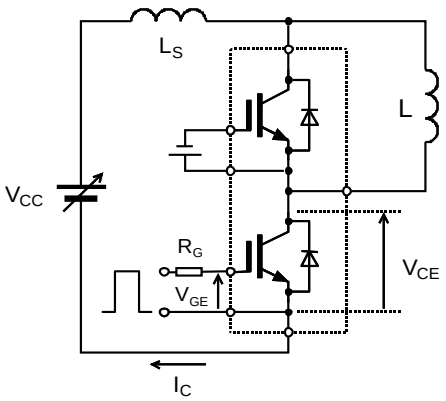

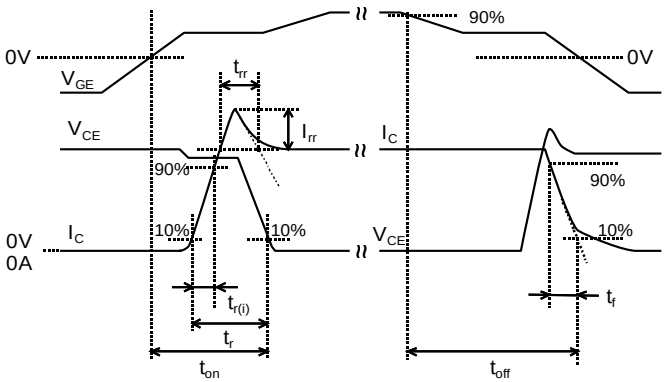

11. Packing and labeling

Display on the packing box

- Logo of production
- Type name
- Lot No
- Products quantity in a packing box

This material and the information herein is the property of Fuji Electric Co.,Ltd. They shall be neither reproduced , copied , lent , or disclosed in any way whatsoever for the use of any third party nor used for the manufacturing purposes without the express written consent of Fuji Electric Co.,Ltd.

Collector current vs. Collector-Emitter voltage (typ.)
Tj= 25°C / chip

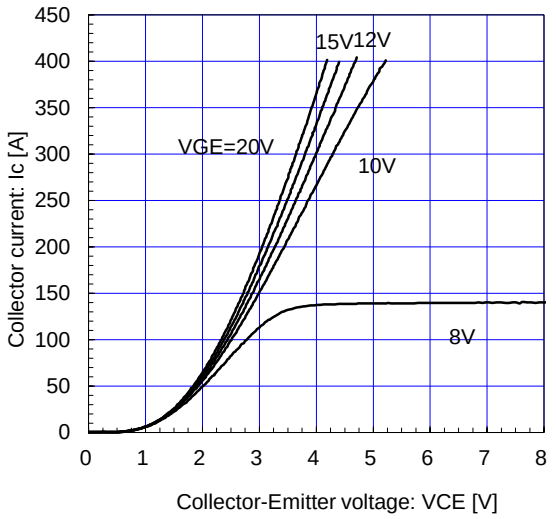

Collector current vs. Collector-Emitter voltage (typ.)
Tj= 150°C / chip

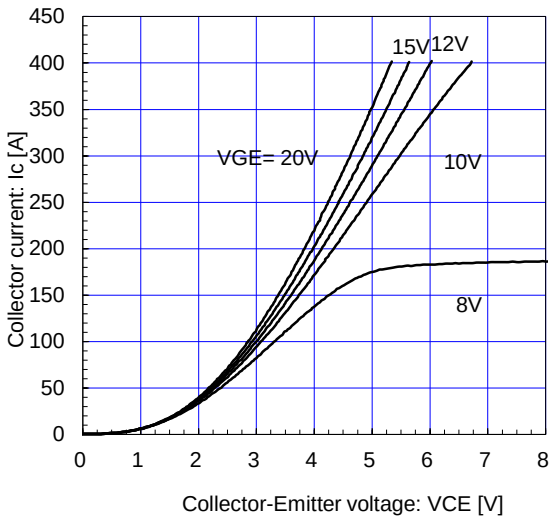

Collector current vs. Collector-Emitter voltage (typ.)
VGE= 15V / chip

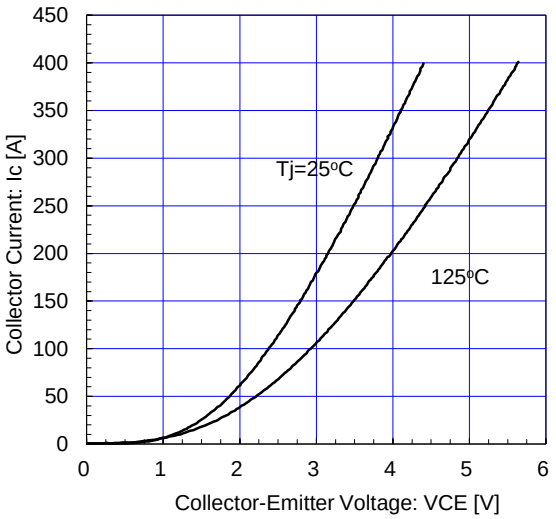

Collector-Emitter voltage vs. Gate-Emitter voltage
Tj= 25°C / chip

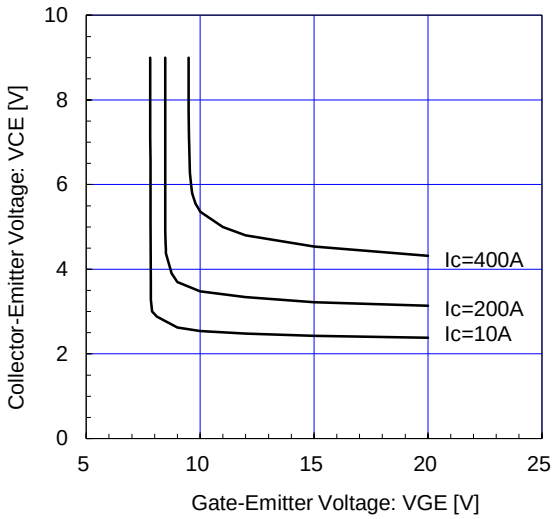

Capacitance vs. Collector-Emitter Voltage (typ.)
VGE= 0V, f= 1MHz, Tj= 25°C

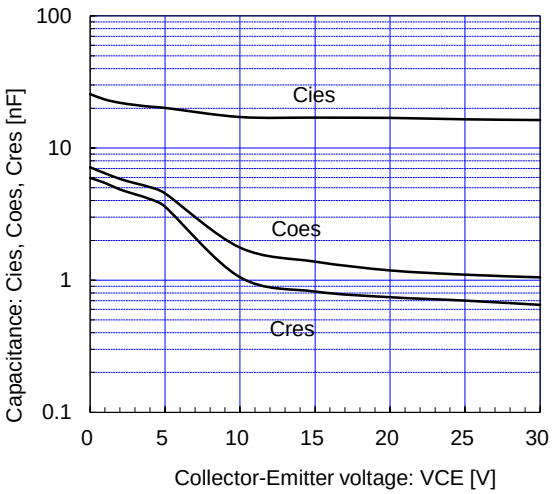

Dynamic Gate Charge (typ.)
Vcc=600V, Ic=200A, Tj= 25°C

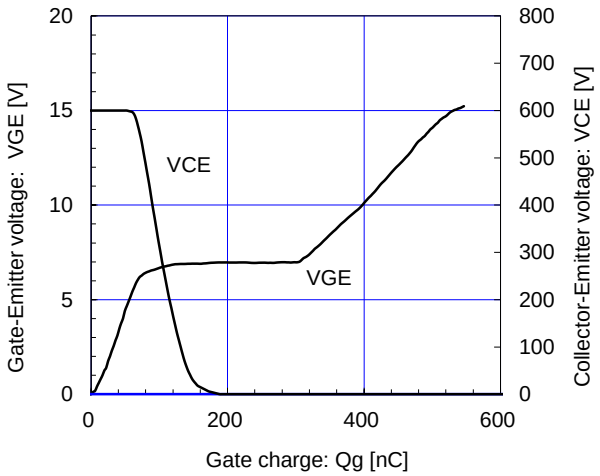

This material and the information herein is the property of Fuji Electric Co.,Ltd. They shall be neither reproduced , copied , lent , or disclosed in any way whatsoever for the use of any third party nor used for the manufacturing purposes without the express written consent of Fuji Electric Co.,Ltd.

Switching time vs. Collector current (typ.)
Vcc=600V, VGE=±15V, Rg=4.7Ω, Tj=25°C (a)

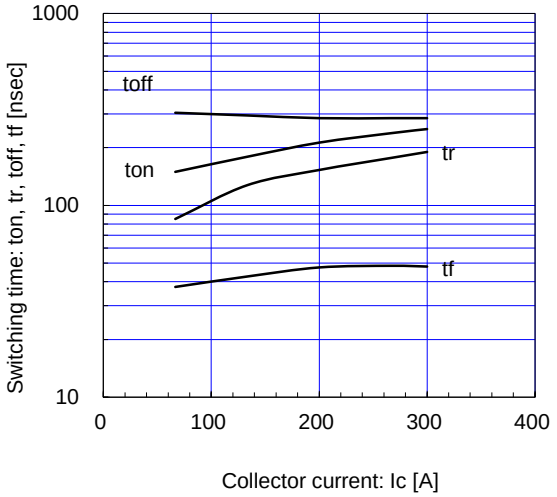

Switching time vs. Collector current (typ.)
Vcc=600V, VGE=±15V, Rg=4.7Ω, Tj=125°C

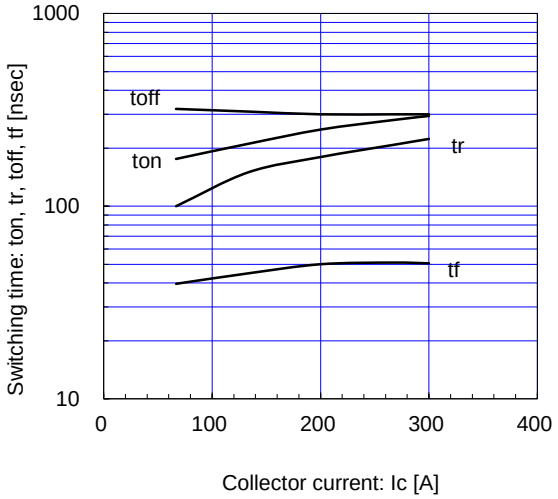

Switching time vs. Gate resistance (typ.)
Vcc=600V, Ic=200A, VGE=±15V, Tj=125°C

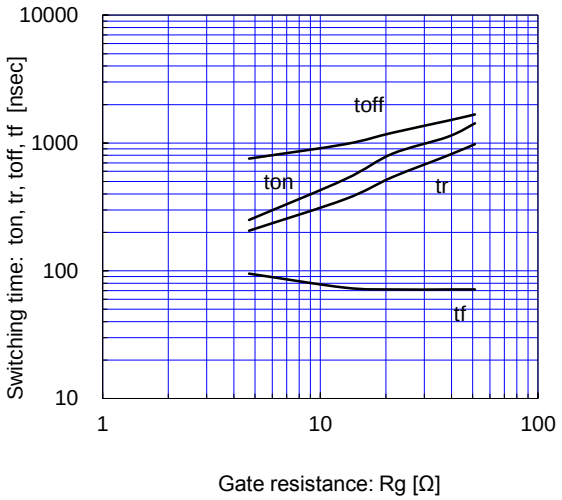

Switching loss vs. Collector current (typ.)
Vcc=600, VGE=±15V, Rg=4.7Ω, Tj=25, 125°C

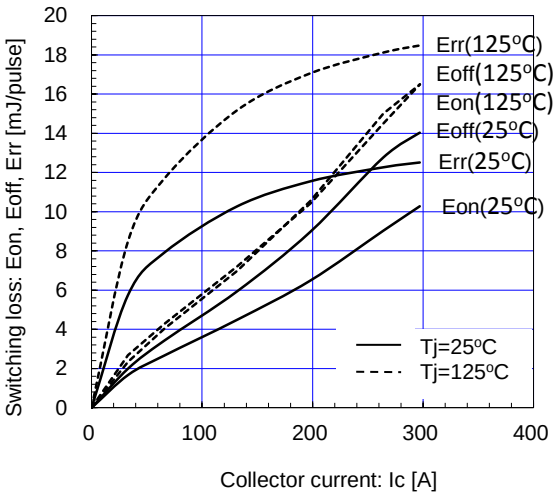

Switching loss vs. Gate resistance (typ.)
Vcc=600V, Ic=200A, VGE=±15V, Tj=25, 125°C

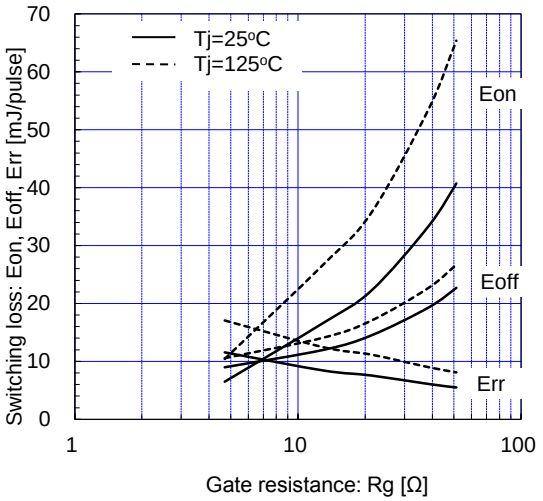

Reverse bias safe operating area (max.)
+VGE=15V, -VGE=15V, Rg=4.7Ω, Tj=125°C

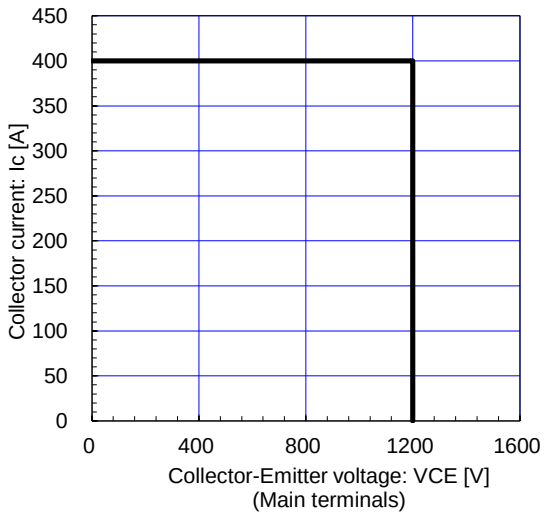

This material and the information herein is the property of Fuji Electric Co.,Ltd. They shall be neither reproduced , copied , lent , or disclosed in any way whatsoever for the use of any third party nor used for the manufacturing purposes without the express written consent of Fuji Electric Co.,Ltd.

Forward Current vs. Forward Voltage (typ.)
chip

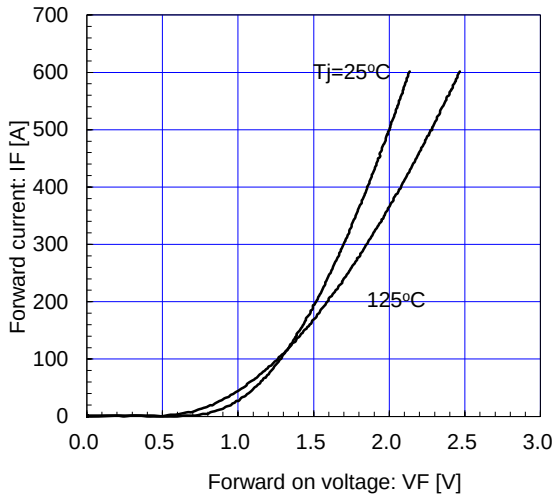

Reverse Recovery Characteristics (typ.)
Vcc=600V, VGE=±15V, Rg=4.7Ω, Tj=125°C

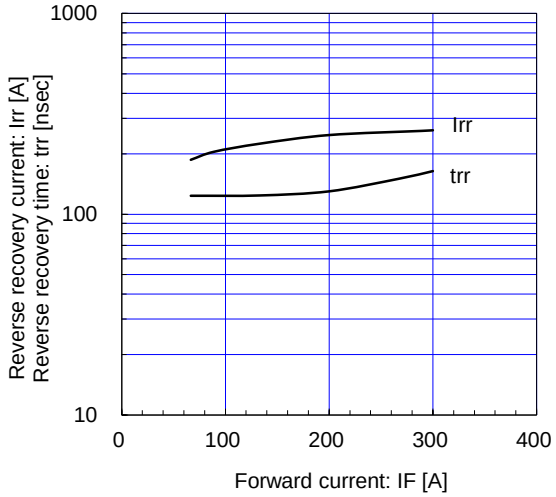

Transient Thermal Resistance (max.)

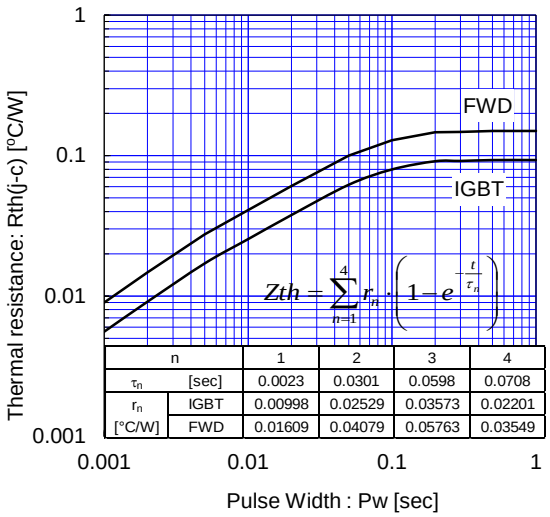

n		1	2	3	4
τ_n	[sec]	0.0023	0.0301	0.0598	0.0708
r_n	IGBT	0.00998	0.02529	0.03573	0.02201
[°C/W]	FWD	0.01609	0.04079	0.05763	0.03549

FWD safe operating area (max.)
Tj=125°C

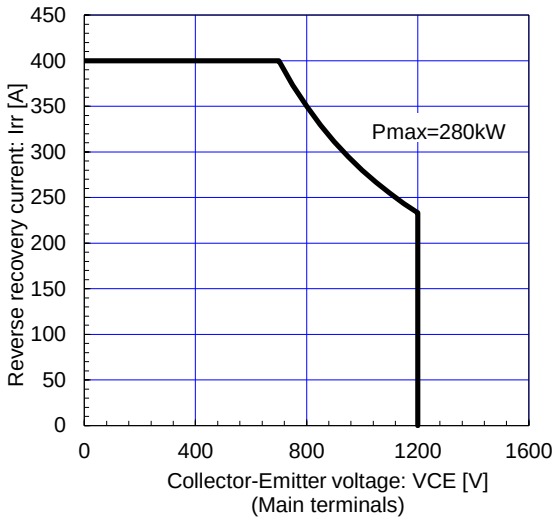

This material and the information herein is the property of Fuji Electric Co.,Ltd. They shall be neither reproduced , copied , lent , or disclosed in any way whatsoever for the use of any third party nor used for the manufacturing purposes without the express written consent of Fuji Electric Co.,Ltd.